BILL OF MATERIAL

SEQ. NO.	SEQ. QTY	SHIP MARK	MINOR MARK	QTY TOTAL	QTY UNIT	DESCRIPTION MATERIAL	LENGTH FT.	LENGTH IN.	STEEL GRADE	REMARKS	ADVANCE BILL#
6032	1	2334B1		ONE		BEAM					2746
			2334B1	1	1	W14X53	19'	2 3/4"	A992	ROLLED	
			p3176	2	2	FL5/8"X3 1/2"	0'	9"	A36		
			p3493	1	1	FL3/8"X6 3/4"	0'	10"	A36		
			p3514	2	2	FL3/8"X6 3/4"	0'	11"	A36		
			p3526	1	1	FL3/8"X6 3/4"	0'	9"	A36		
			p4722	1	1	FL1/4"X3 3/4"	1'	0 7/16"	A36		
			p4924	2	2	FL3/8"X8"	0'	8"	A36		
			p5039	1	1	FL5/16"X7 1/2"	1'	0 7/16"	A36		
			p5041	1	1	FL1/4"X3 3/4"	1'	0 7/16"	A36		
			p5300	1	1	FL3/8"X6 3/4"	0'	9"	A36		
			p5310	1	1	PL5/16"X7 5/16"	1'	0 7/16"	A36		
			p5316	1	1	FL3/8"X6 3/4"	0'	10"	A36		
			w2959	1	1	W14X53	8'	5 3/8"	A992	ROLLED	
						FIELD BOLTS					
				6		3/4" DIA A325_TC	0'	2"		1HD WASH	

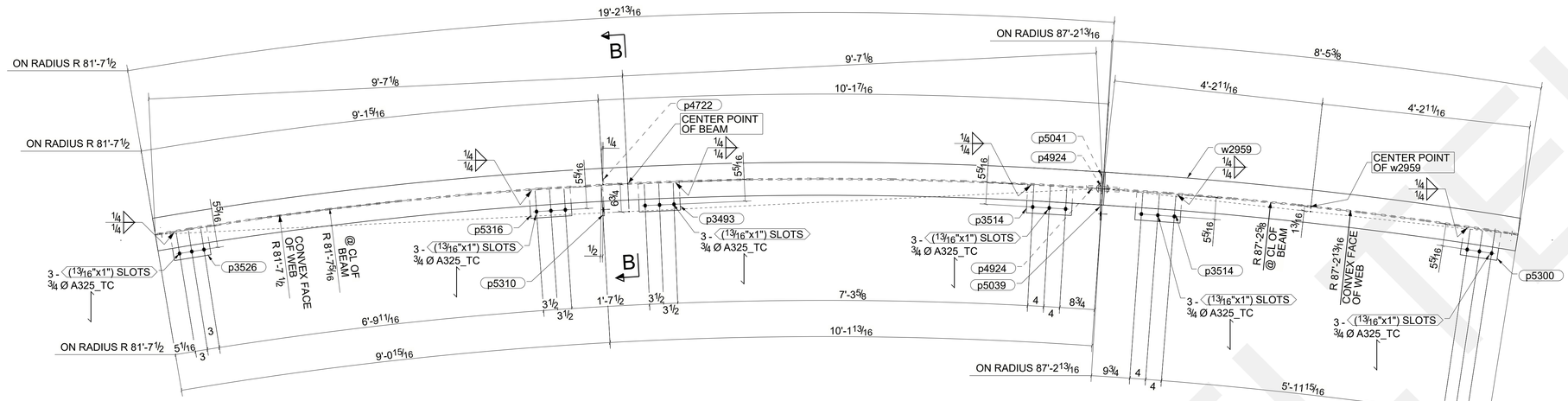

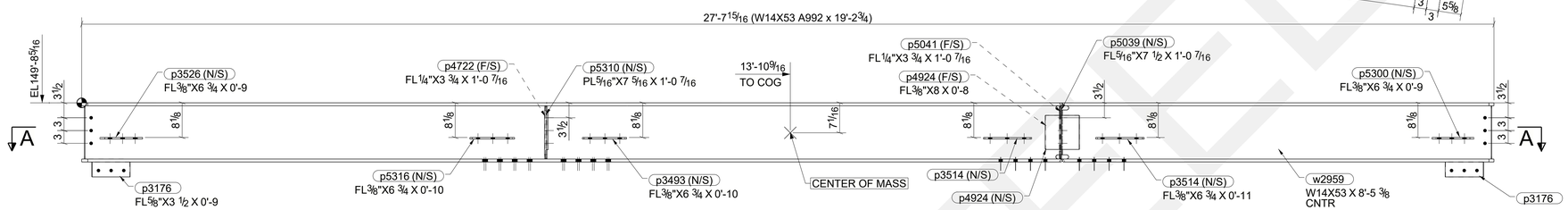

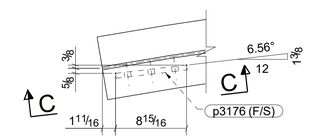

DETAIL- A

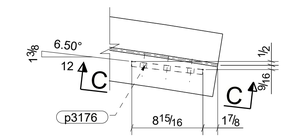

DETAIL- B

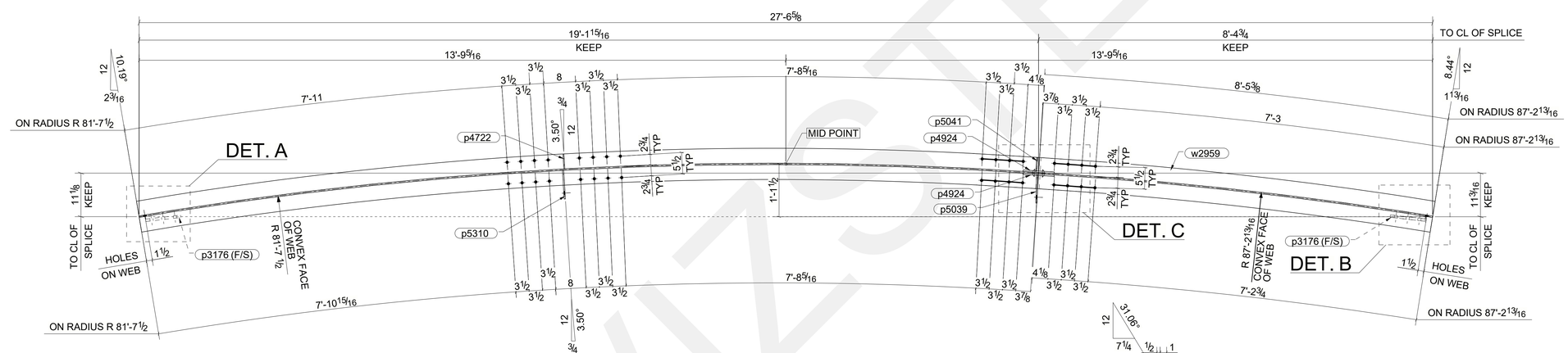

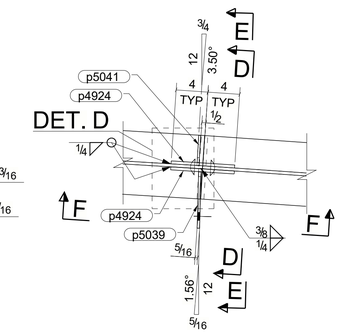

DETAIL- C

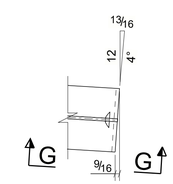

DETAIL- D

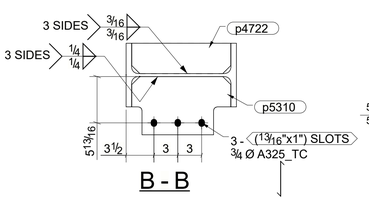

B - B

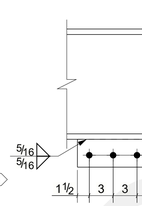

C - C

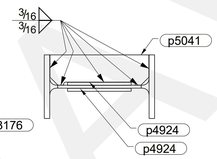

D - D

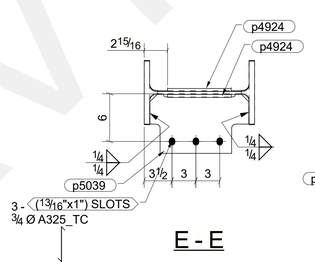

E - E

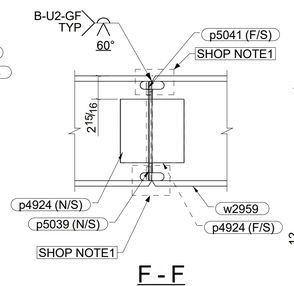

F - F

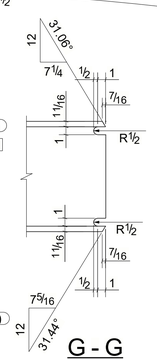

G - G

ONE-BEAM-2334B1

W	13 7/8"x3/8"
F	8"x11/16"
K	1 1/2"

RAVIZ STEEL